Drawings of GNM Training Centre, Dhemaji, Assam

Submitted by- INTEGRA VENTURES

Prithvi Greens, Block A, Ground Floor, Pathar Quarry

Guwahati: 781171, Assam, India

Branches

GUWAHATI|KOLKATA|DELHI|BENGALURU|NAIROBI |

LIST OF DRAWINGS			
DHEMAJI GNM			
Sl No.	**Drawing Name**	**Drawing Number**	**No**
1	AS BUILT SITE PLAN	2024/ASSIST-GNM/DHE/SP/AS BUILT/01	1
2	PROPOSED SITE PLAN	2024/ASSIST-GNM/DHE/SP/PROP/01	1
	CIVIL		
3	AS BUILT GROUND FLOOR PLAN FOR ACADEMIC BLOCK	2024/ASSIST-GNM/DHE/AR/ACA/AS BUILT/01	1
4	AS BUILT GROUND FLOOR PLAN FOR HOSTEL BLOCK	2024/ASSIST-GNM/DHE/AR/H/PROP/01	1
5	PROPOSED GROUND FLOOR PLAN FOR ACADEMIC BLOCK	2024/ASSIST-GNM/DHE/AR/ACA/PROP/01	1
6	PROPOSED GROUND FLOOR PLAN FOR ACADEMIC BLOCK 1	2024/ASSIST-GNM/DHE/AR/ACA/PROP/01	1
7	PROPOSED FIRST FLOOR PLAN FOR ACADEMIC BLOCK 1	2024/ASSIST-GNM/DHE/AR/ACA/PROP/02	1
	PLUMBING		
8	PLUMBING LAYOUT FOR GROUND FLOOR PLAN ACADEMIC BLOCK	2024/ASSIST-GNM/DHE/P/ACA/PROP/01	1
9	PLUMBING LAYOUT FOR GROUND FLOOR PLAN HOSTEL BLOCK	2024/ASSIST-GNM/DHE/P/H/PROP/01	1
	ELECTRICAL		
10	ELECTRICAL LAYOUT FOR GROUND FLOOR PLAN ACADEMIC BLOCK	2024/ASSIST-GNM/DHE/E/ACA/PROP/01	1
11	ELECTRICAL LAYOUT FOR GROUND FLOOR PLAN HOSTEL BLOCK	2024/ASSIST-GNM/DHE/E/H/PROP/01	1
	FIRE FIGHTING		
12	FIRE FIGHTING LAYOUT OF AS BUILT GROUND FLOOR PLAN ACADEMIC BLOCK	2024/ASSIST-GNM/DHE/FF/ACA/PROP/01	1
13	FIRE FIGHTING LAYOUT OF AS BUILT GROUND FLOOR PLAN HOSTEL BLOCK	2024/ASSIST-GNM/DHE/FF/H/PROP/01	1
14	**ROAD DETAIL**	2024/ASSIST-GNM/DHE/ROAD /01	1
15	**DRAIN DETAIL**	2024/ASSIST-GNM/DHE/DRAIN/01	1
16	**SECURITY CABIN**	2024/ASSIST-GNM/DHE/SECURITY /01	1
17	**SEPTIC TANK**	2024/ASSIST-GNM/DHE/SEPTIC TANK /01	1

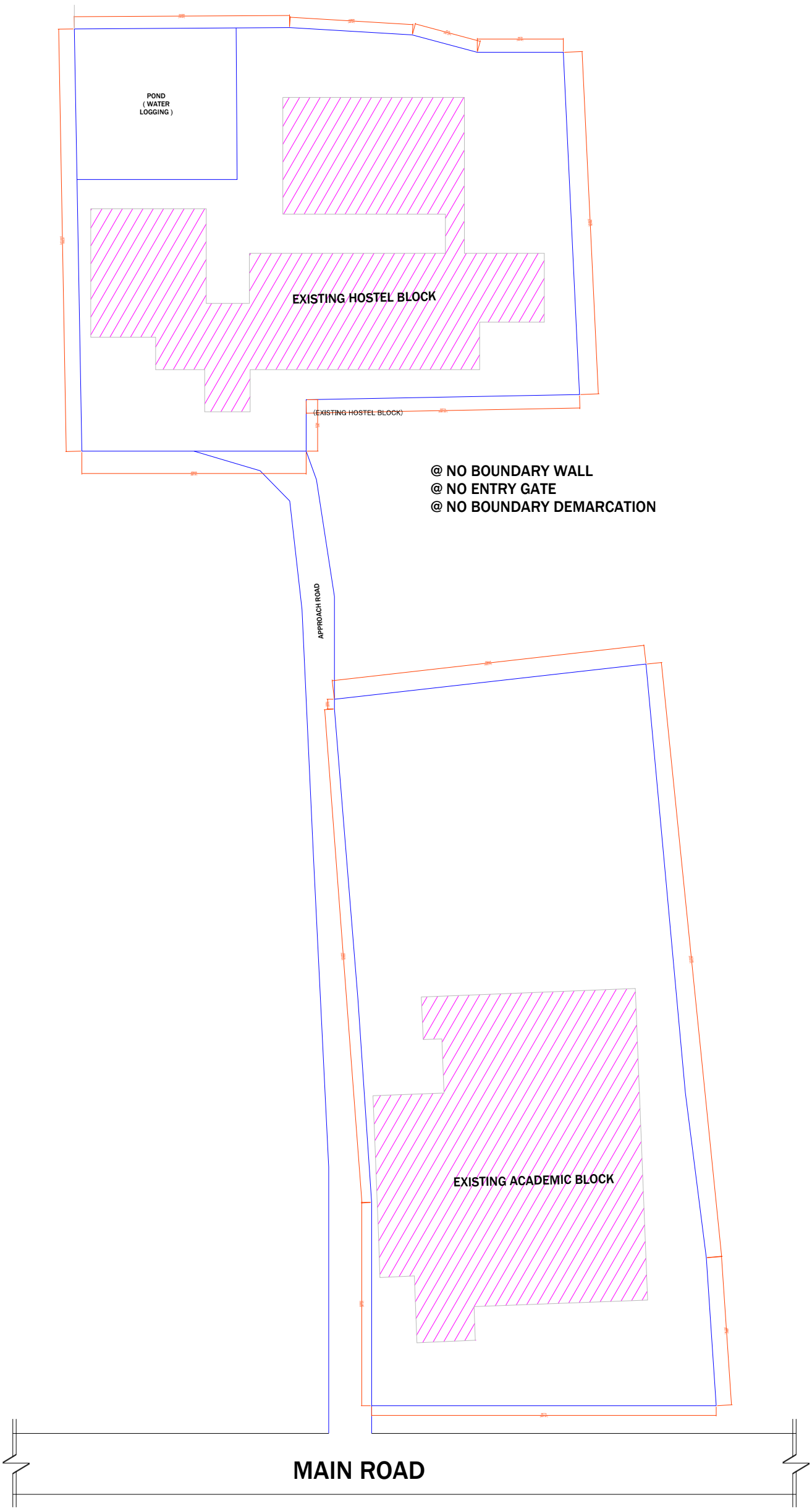

EXISTING SITE PLAN
(GNM SCHOOL OF NURSING DHEMAJI)
SCALE- 1:100

PROJECT:-
ASSAM STATE SECONDARY HEALTHCARE INITIATIVE FOR SERVICE DELIVERY TRANSFORMATION (ASSIST)

CLIENT:-
ASSAM HEALTH INFRASTRUCTURE DEVELOPMENT & MANAGEMENT SOCIETY (AHIDMS)

PRINCIPAL CONSULTANT:

INTEGRA VENTURES
HEALTHCARE solutions | INFRASTRUCTURE projects | CONSULTANCY services

PRITHVI GREENS, BLOCK A GROUND FLOOR
PATHARQUARY GUWAHATI-781171, ASSAM
M: +91-8473872062

STAGE:-	DPR

DRAWING NO:-
2024/ASSIST-GNM/DHE/SITE/AS BUILT/01

START DATE	ISSUE DATE	SHEET SIZE
	07-04-2025	A3

PROJECT CODE:-	2024/ASSIST-GNM/DH
SCALE:-	N.T.S.

DRAWING TITLE:-
AS BUILT SITE PLAN,ANM DHEMAJI,ASSAM

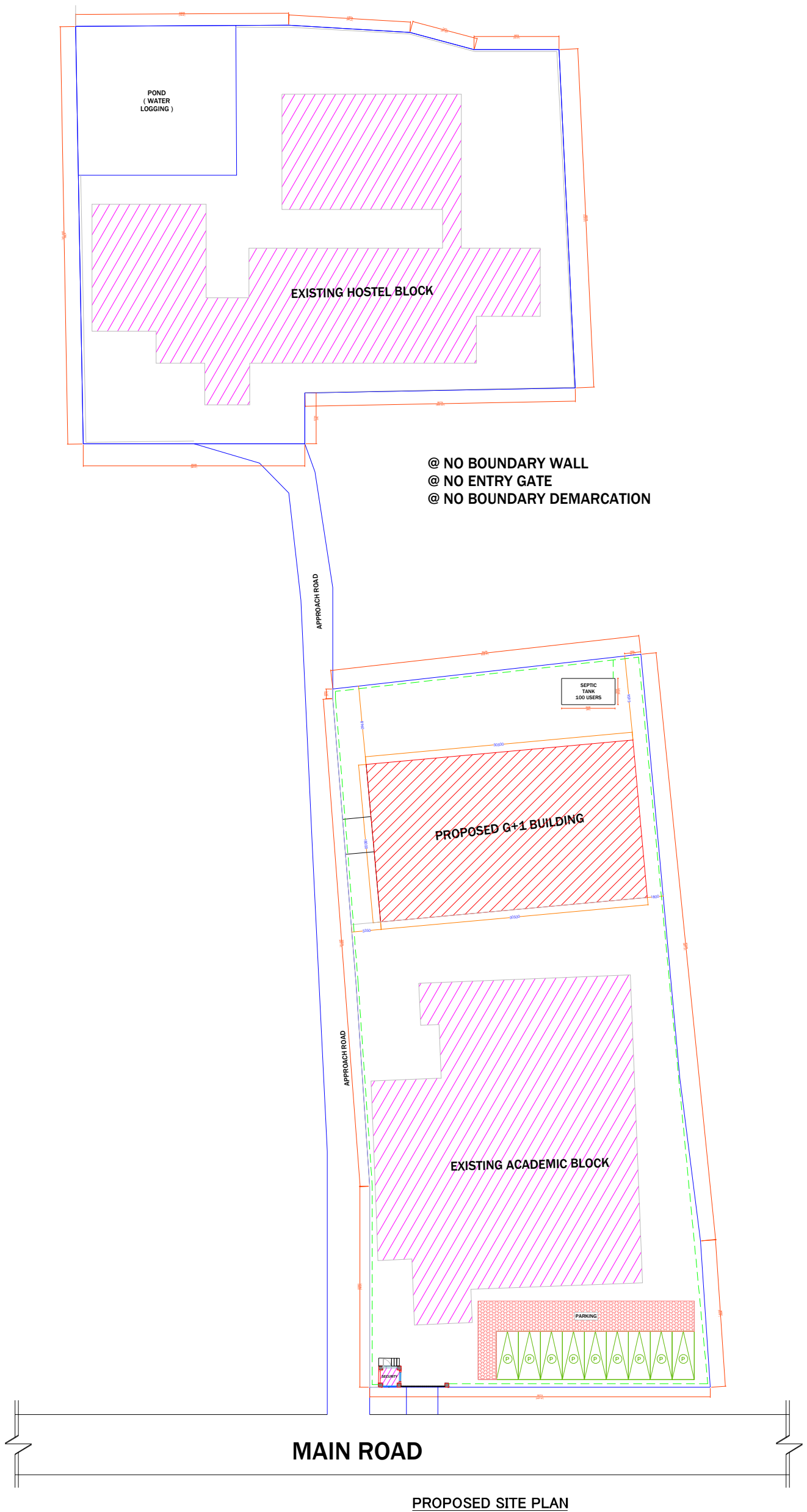

PROPOSED SITE PLAN
(GNM SCHOOL OF NURSING DHEMAJI)
SCALE- 1:100

LEGEND:	
	EXISTING
	PROPOSED

LEGEND:-	
1. EXISTING ROAD	-
2. PROPOSED ROAD	-
3. EXISTING STRUCTURE	-
4. PROPOSED STRUCTURE	-
5. DRAINAGE LINE	-
6. CAR PARKING	- P
7. SCOOTER PARKING	- SC

PROJECT:-
ASSAM STATE SECONDARY HEALTHCARE INITIATIVE FOR SERVICE DELIVERY TRANSFORMATION (ASSIST)

CLIENT:-
ASSAM HEALTH INFRASTRUCTURE DEVELOPMENT & MANAGEMENT SOCIETY (AHIDMS)

PRINCIPAL CONSULTANT:

INTEGRA VENTURES
HEALTHCARE solutions | INFRASTRUCTURE projects | CONSULTANCY services

PRITHVI GREENS, BLOCK A GROUND FLOOR
PATHARQUARY GUWAHATI-781171, ASSAM
M: +91-8473872062

STAGE:-	DPR	
DRAWING NO:- 2024/ASSIST-GNM/DHE/SITE/PROP/01		
START DATE	ISSUE DATE	SHEET SIZE
	07-04-2025	A3
PROJECT CODE:-	2024/ASSIST-GNM/DH	
SCALE:-	N.T.S.	

DRAWING TITLE:-
PROPOSED SITE PLAN,ANM DHEMAJI,ASSAM

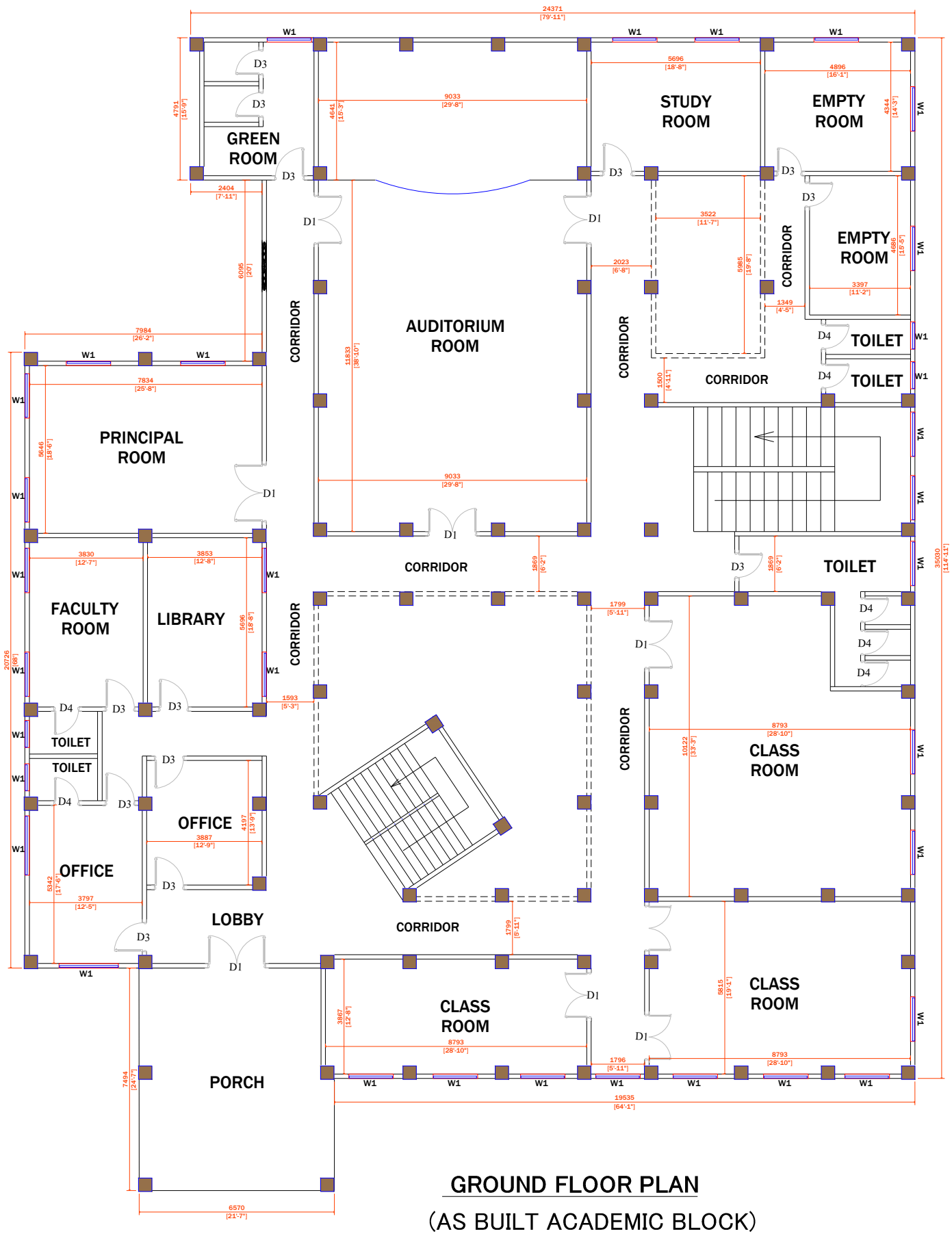

GROUND FLOOR PLAN

(AS BUILT ACADEMIC BLOCK)

PROJECT:-
ASSAM STATE SECONDARY HEALTHCARE INITIATIVE FOR SERVICE DELIVERY TRANSFORMATION (ASSIST)

CLIENT:-
ASSAM HEALTH INFRASTRUCTURE DEVELOPMENT & MANAGEMENT SOCIETY (AHIDMS)

PRINCIPAL CONSULTANT:
INTEGRA VENTURES
HEALTHCARE | INFRASTRUCTURE | CONSULTANCY
solutions projects services
PRITHVI GREENS, BLOCK A GROUND FLOOR
PATHARQUARY GUWAHATI-781171, ASSAM
M: +91-8473872062

STAGE:-	DPR
DRAWING NO:-	2024/ASSIST-GNM/DHE/AR/ACA/AS BUILT/01

START DATE	ISSUE DATE	SHEET SIZE
	07-04-2025	A3

PROJECT CODE:-	2024/ASSIST-GNM/DHE
SCALE:-	N.T.S.

DRAWING TITLE:-

AS BUILT GROUND FLOOR PLAN FOR ACADEMIC BLOCK, GNM DHEMAJI,ASSAM

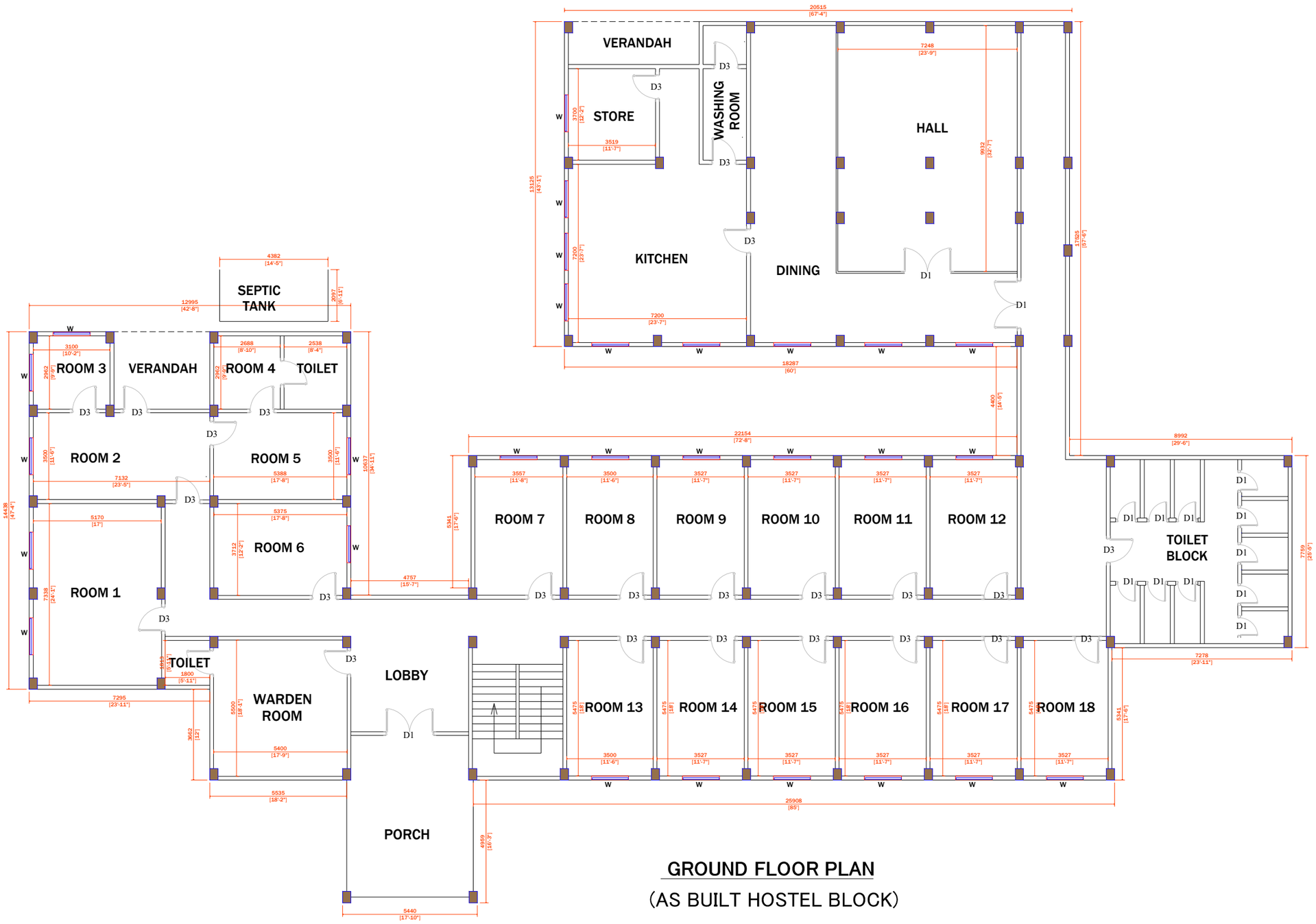

GROUND FLOOR PLAN

(AS BUILT HOSTEL BLOCK)

PROJECT:-
ASSAM STATE SECONDARY HEALTHCARE INITIATIVE FOR SERVICE DELIVERY TRANSFORMATION (ASSIST)

CLIENT:-
ASSAM HEALTH INFRASTRUCTURE DEVELOPMENT & MANAGEMENT SOCIETY (AHIDMS)

PRINCIPAL CONSULTANT:

INTEGRA VENTURES
HEALTHCARE | INFRASTRUCTURE | CONSULTANCY

PRITHVI GREENS, BLOCK A GROUND FLOOR
PATHARQUARY,GUWAHATI-781171, ASSAM
M: +91-9401727143

STAGE:-	DPR	
DRAWING NO:- 2024/ASSIST-GNM/DHE/AR/HS/AS BUILT/01		
START DATE	ISSUE DATE	SHEET SIZE
	07-04-2025	A3
PROJECT CODE:-	2024/ASSIST-GNM/DHE	
SCALE:-	N.T.S.	

DRAWING TITLE:-

AS BUILT GROUND FLOOR PLAN FOR HOSTEL BLOCK, GNM DHEMAJI,ASSAM

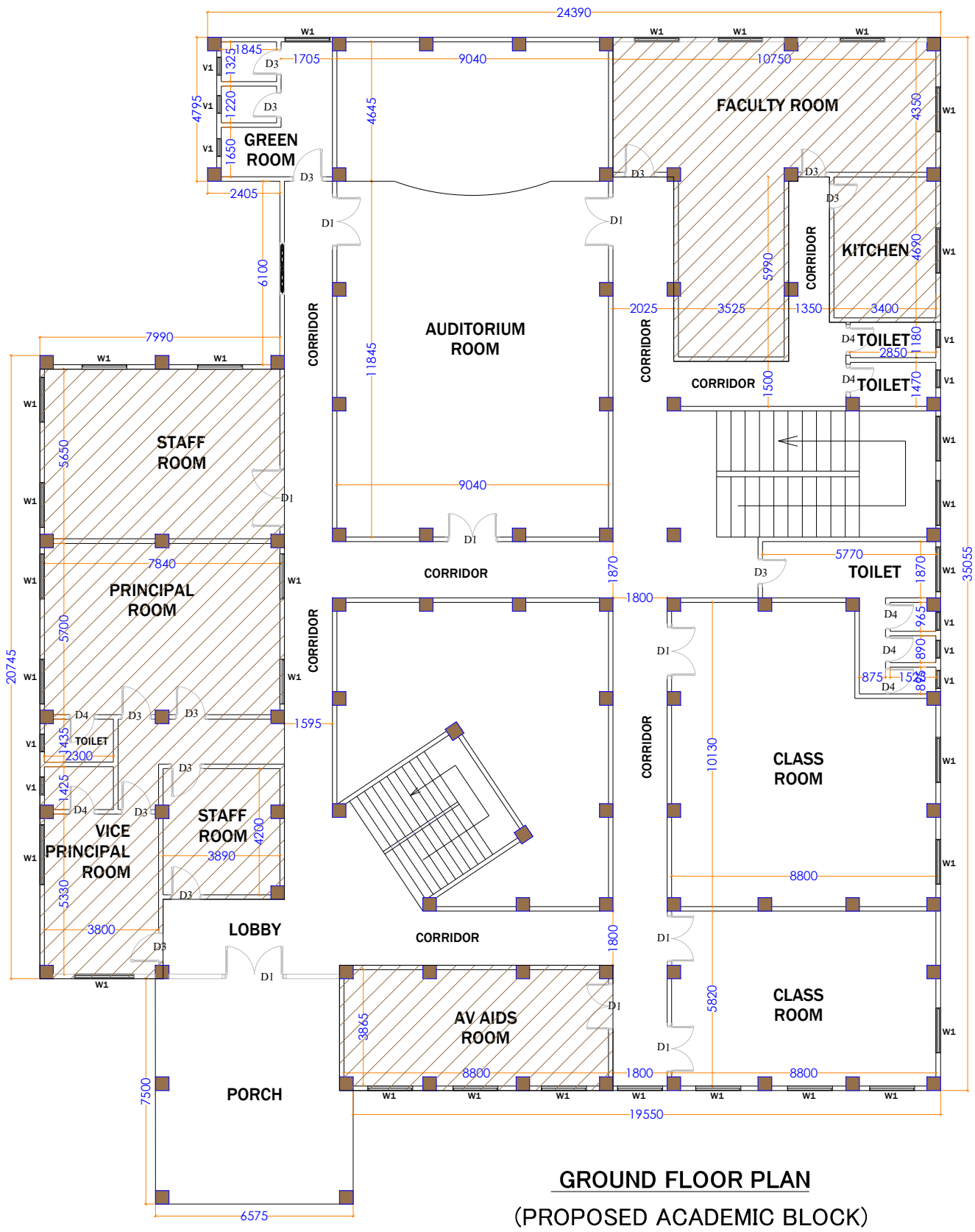

GROUND FLOOR PLAN

(PROPOSED ACADEMIC BLOCK)

DOOR SCHEDULE:-

SNO	NAME	WIDTH	HEIGHT	REMARKS
1.	D1	1800	2100	DOUBLE PANEL DOOR
2.	D2	1500	2100	DOUBLE PANEL DOOR
3.	D3	1200	2100	SINGLE PANEL DOOR
4.	D4	750	2100	SINGLE PANEL DOOR

WINDOW SCHEDULE:-

SNO	NAME	SILL	WIDTH	HEIGHT	REMARKS
1.	W1	750	1500	1350	DOUBLE PANEL WINDOW
2.	W2	750	1000	1350	DOUBLE PANEL WINDOW
3.	V1	1500	600	600	SINGLE PANEL WINDOW

PROJECT:-
ASSAM STATE SECONDARY HEALTHCARE INITIATIVE FOR SERVICE DELIVERY TRANSFORMATION (ASSIST)

CLIENT:-
ASSAM HEALTH INFRASTRUCTURE DEVELOPMENT & MANAGEMENT SOCIETY (AHIDMS)

PRINCIPAL CONSULTANT:
INTEGRA VENTURES
HEALTHCARE | INFRASTRUCTURE | CONSULTANCY
solutions projects services
PRITHVI GREENS, BLOCK A GROUND FLOOR
PATHARQUARY GUWAHATI-781171, ASSAM
M: +91-8473872062

STAGE:-	DPR	
DRAWING NO:- 2024/ASSIST-GNM/DHE/AR/ACA/PROP/01		
START DATE	ISSUE DATE	SHEET SIZE
	07-04-2025	A3
PROJECT CODE:-	2024/ASSIST-GNM/DHE	
SCALE:-	N.T.S.	

DRAWING TITLE:-
PROPOSED GROUND FLOOR ACADEMIC BLOCK

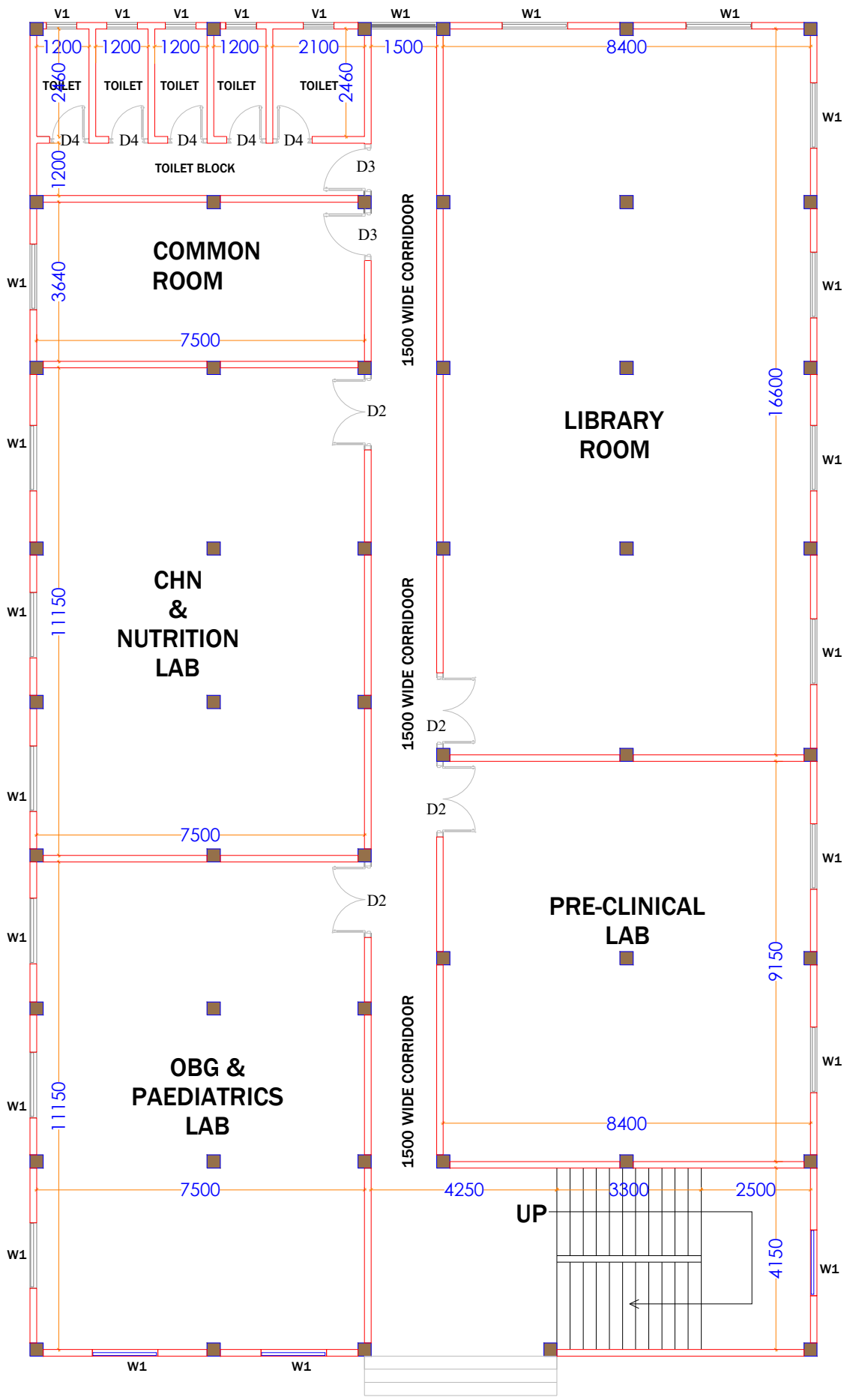

PROPOSED GROUND FLOOR PLAN (BLOCK 1) SCALE- 1:100

DOOR SCHEDULE:-

SNO	NAME	WIDTH	HEIGHT	REMARKS
1.	D1	1800	2100	DOUBLE PANEL DOOR
2.	D2	1500	2100	DOUBLE PANEL DOOR
3.	D3	1200	2100	SINGLE PANEL DOOR
4.	D4	750	2100	SINGLE PANEL DOOR

WINDOW SCHEDULE:-

SNO	NAME	SILL	WIDTH	HEIGHT	REMARKS
1.	W1	750	1500	1350	DOUBLE PANEL WINDOW
2.	W2	750	1000	1350	DOUBLE PANEL WINDOW
3.	V1	1500	600	600	SINGLE PANEL WINDOW

PROJECT:-
ASSAM STATE SECONDARY HEALTHCARE INITIATIVE FOR SERVICE DELIVERY TRANSFORMATION (ASSIST)

CLIENT:-
ASSAM HEALTH INFRASTRUCTURE DEVELOPMENT & MANAGEMENT SOCIETY (AHIDMS)

PRINCIPAL CONSULTANT:
INTEGRA VENTURES
HEALTHCARE | INFRASTRUCTURE | CONSULTANCY
solutions projects services
PRITHVI GREENS, BLOCK A GROUND FLOOR
PATHARQUARY GUWAHATI-781171, ASSAM
M: +91-8473872062

STAGE:-	DPR	
DRAWING NO:- 2024/ASSIST-GNM/DHE/AR/ACA/PROP/01		
START DATE	ISSUE DATE	SHEET SIZE
	07-04-2025	A3
PROJECT CODE:-	2024/ASSIST-GNM/DHE	
SCALE:-	N.T.S.	

DRAWING TITLE:-
PROPOSED GROUND FLOOR PLAN OF ACADEMIC BLOCK 1

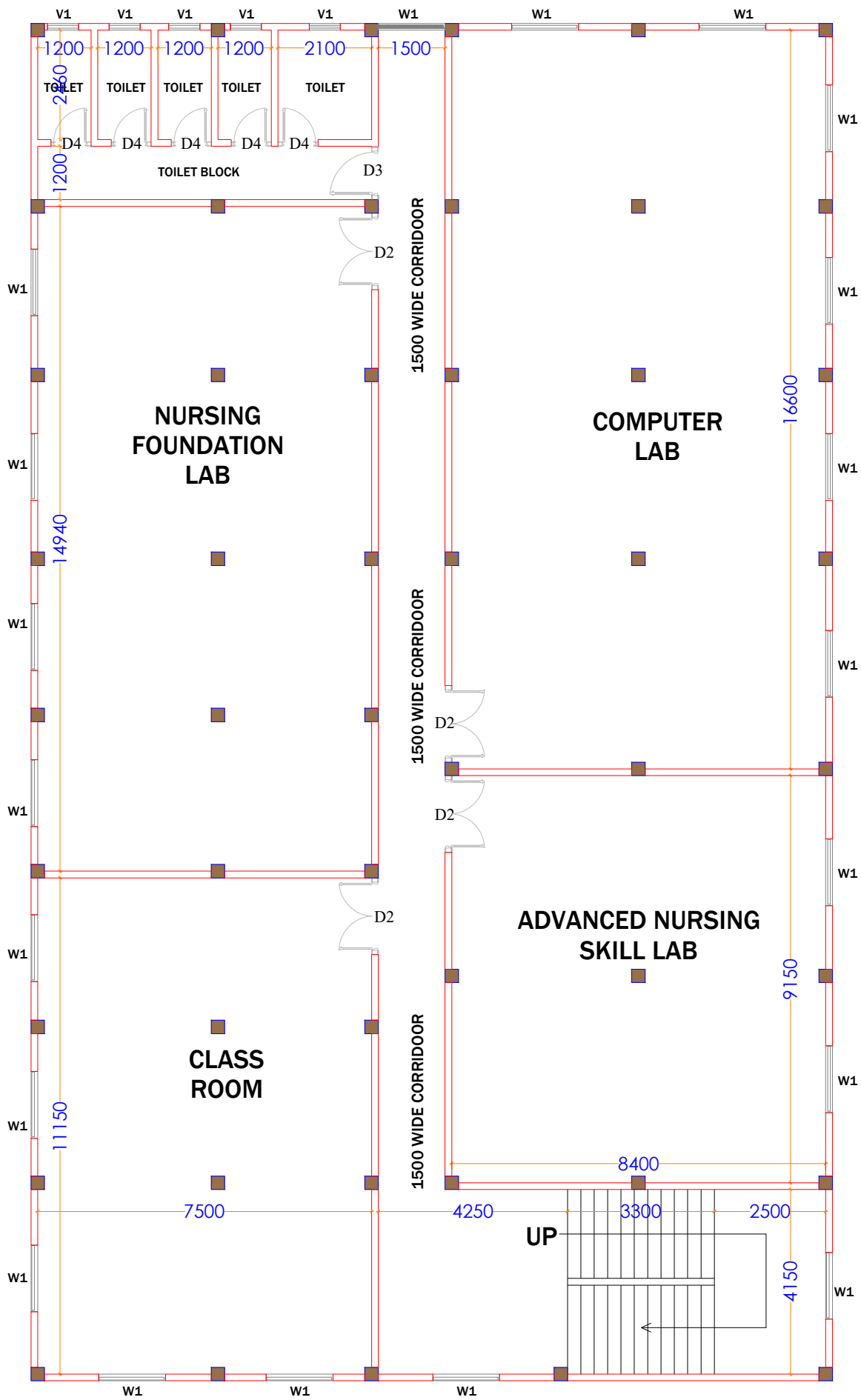

PROPOSED 1ST FLOOR PLAN (BLOCK 1) SCALE- 1:100

DOOR SCHEDULE:-

SNO	NAME	WIDTH	HEIGHT	REMARKS
1.	D1	1800	2100	DOUBLE PANEL DOOR
2.	D2	1500	2100	DOUBLE PANEL DOOR
3.	D3	1200	2100	SINGLE PANEL DOOR
4.	D4	750	2100	SINGLE PANEL DOOR

WINDOW SCHEDULE:-

SNO	NAME	SILL	WIDTH	HEIGHT	REMARKS
1.	W1	750	1500	1350	DOUBLE PANEL WINDOW
2.	W2	750	1000	1350	DOUBLE PANEL WINDOW
3.	V1	1500	600	600	SINGLE PANEL WINDOW

PROJECT:-
ASSAM STATE SECONDARY HEALTHCARE INITIATIVE FOR SERVICE DELIVERY TRANSFORMATION (ASSIST)

CLIENT:-
ASSAM HEALTH INFRASTRUCTURE DEVELOPMENT & MANAGEMENT SOCIETY (AHIDMS)

PRINCIPAL CONSULTANT:
INTEGRA VENTURES
HEALTHCARE | INFRASTRUCTURE | CONSULTANCY
solutions projects services
PRITHVI GREENS, BLOCK A GROUND FLOOR
PATHARQUARY GUWAHATI-781171, ASSAM
M: +91-8473872062

STAGE:-	DPR	
DRAWING NO:- 2024/ASSIST-GNM/DHE/AR/ACA/PROP/02		
START DATE	ISSUE DATE	SHEET SIZE
	07-04-2025	A3
PROJECT CODE:-	2024/ASSIST-GNM/DHE	
SCALE:-	N.T.S.	

DRAWING TITLE:-
PROPOSED FIRST FLOOR PLAN OF ACADEMIC BLOCK 1

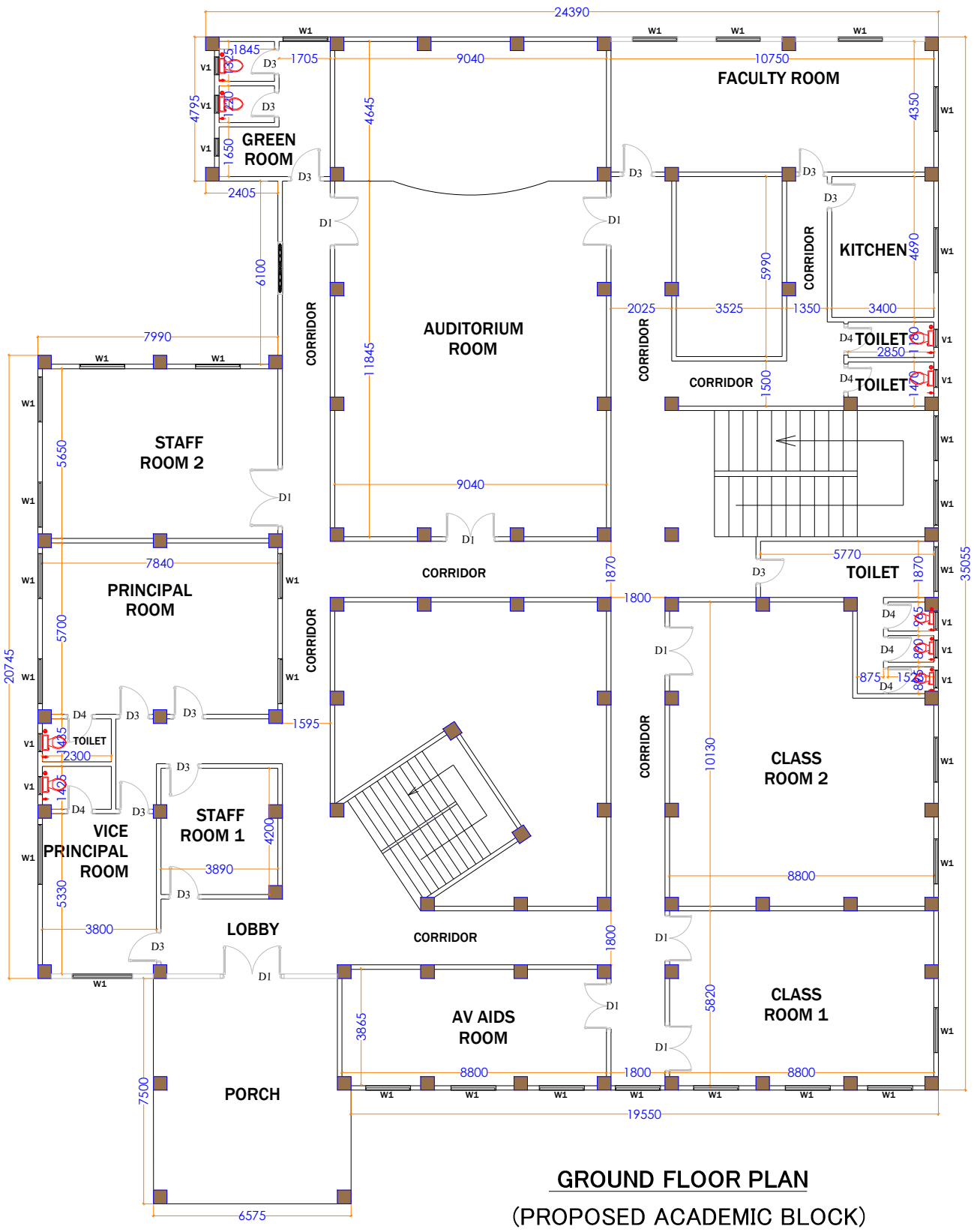

GROUND FLOOR PLAN

(PROPOSED ACADEMIC BLOCK)

LEGEND:

	EXISTING
	PROPOSED

PROJECT:-
ASSAM STATE SECONDARY HEALTHCARE INITIATIVE FOR SERVICE DELIVERY TRANSFORMATION (ASSIST)

CLIENT:-
ASSAM HEALTH INFRASTRUCTURE DEVELOPMENT & MANAGEMENT SOCIETY (AHIDMS)

PRINCIPAL CONSULTANT:

INTEGRA VENTURES
HEALTHCARE solutions | INFRASTRUCTURE projects | CONSULTANCY services

PRITHVI GREENS, BLOCK A GROUND FLOOR
PATHARQUARY GUWAHATI-781171, ASSAM
M: +91-8473872062

STAGE:-	DPR	
DRAWING NO:- 2024/ASSIST-GNM/DHE/P/ACA/PROP/01		
START DATE	ISSUE DATE	SHEET SIZE
	07-04-2025	A3
PROJECT CODE:-	2024/ASSIST-GNM/DHE	
SCALE:-	N.T.S.	

DRAWING TITLE:-

PLUMBING LAYOUT OF
AS BUILT GROUND FLOOR
ACADEMIC BLOCK

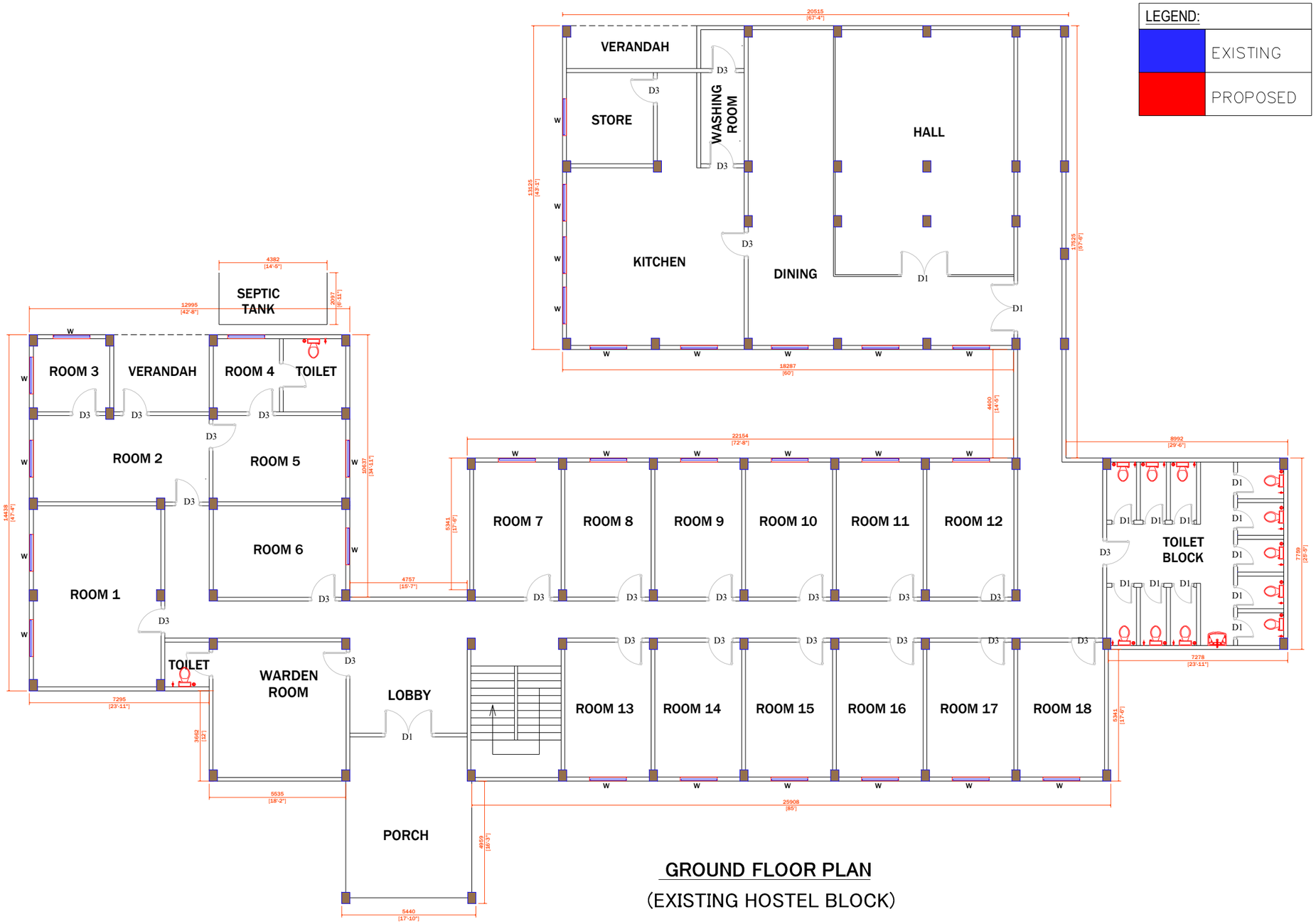

LEGEND:

	EXISTING
	PROPOSED

GROUND FLOOR PLAN

(EXISTING HOSTEL BLOCK)

PROJECT:-
ASSAM STATE SECONDARY HEALTHCARE INITIATIVE FOR SERVICE DELIVERY TRANSFORMATION (ASSIST)

CLIENT:-
ASSAM HEALTH INFRASTRUCTURE DEVELOPMENT & MANAGEMENT SOCIETY (AHIDMS)

PRINCIPAL CONSULTANT:

INTEGRA VENTURES
HEALTHCARE | INFRASTRUCTURE | CONSULTANCY
DESIGNS | PROJECTS | SERVICES

PRITHVI GREENS, BLOCK A GROUND FLOOR
PATHARQUARY GUWAHATI-781171, ASSAM
M: +91-8473872062

STAGE:-	DPR	
DRAWING NO:- 2024/ASSIST-GNM/DHE/P/HS/AS BUILT/01		
START DATE	ISSUE DATE	SHEET SIZE
	07-04-2025	A3
PROJECT CODE:-	2024/ASSIST-GNM/DHE	
SCALE:-	N.T.S.	

DRAWING TITLE:-

PLUMBING LAYOUT OF
AS BUILT GROUND FLOOR HOSTEL BLOCK

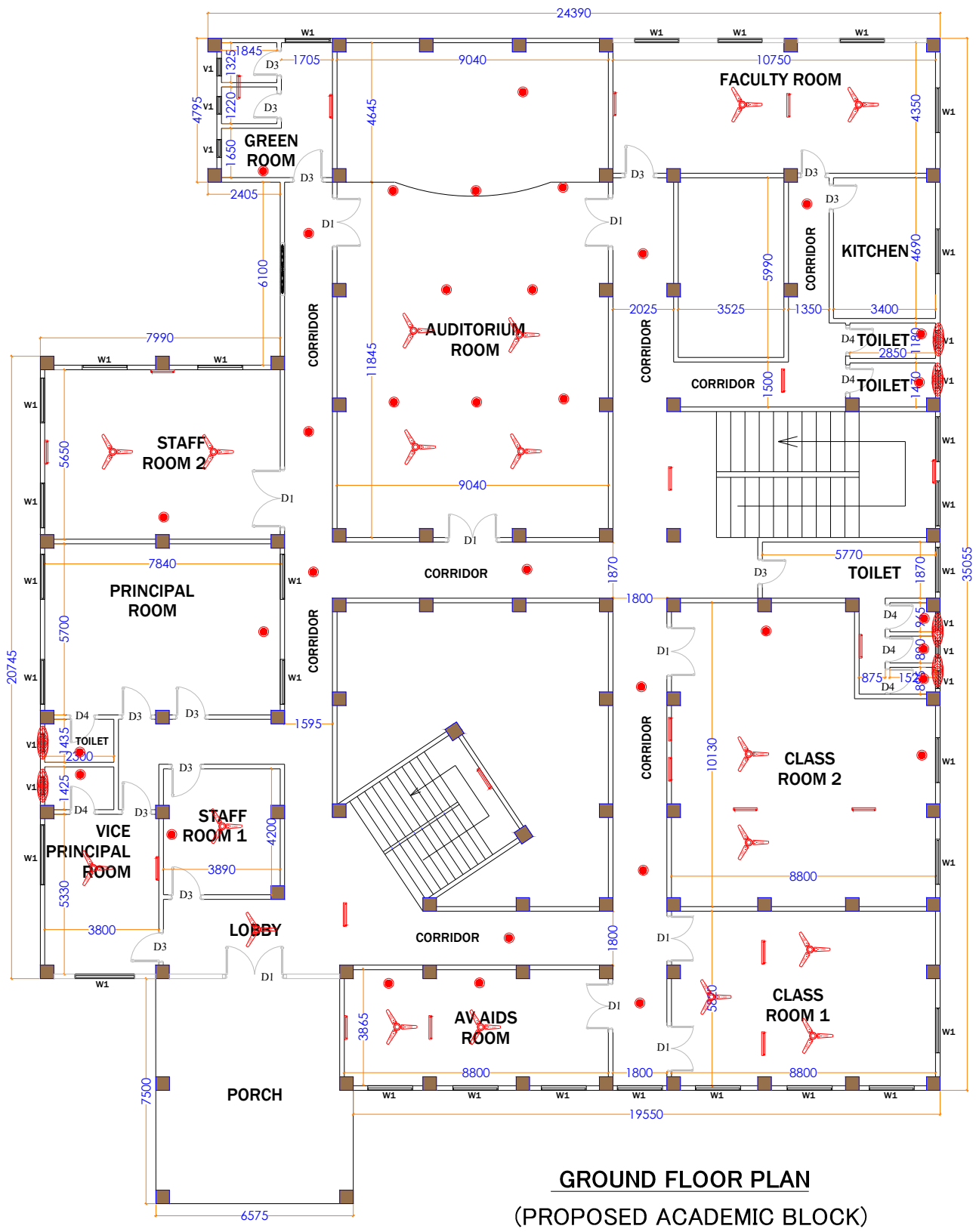

GROUND FLOOR PLAN

(PROPOSED ACADEMIC BLOCK)

DOOR SCHEDULE:-

SNO	NAME	WIDTH	HEIGHT	REMARKS
1.	D1	1800	2100	DOUBLE PANEL DOOR
2.	D2	1500	2100	DOUBLE PANEL DOOR
3.	D3	1200	2100	SINGLE PANEL DOOR
4.	D4	750	2100	SINGLE PANEL DOOR

WINDOW SCHEDULE:-

SNO	NAME	SILL	WIDTH	HEIGHT	REMARKS
1.	W1	750	1500	1350	DOUBLE PANEL WINDOW
2.	W2	750	1000	1350	DOUBLE PANEL WINDOW
3.	V1	1500	600	600	SINGLE PANEL WINDOW

PROPOSED LEGEND:

	20W LED TUBELIGHT
	1200 MM CEILING FAN
	12W LED DOWNLIGHT
	300 MM EXHAUST FAN

PROJECT:-
ASSAM STATE SECONDARY HEALTHCARE INITIATIVE FOR SERVICE DELIVERY TRANSFORMATION (ASSIST)

CLIENT:-
ASSAM HEALTH INFRASTRUCTURE DEVELOPMENT & MANAGEMENT SOCIETY (AHIDMS)

PRINCIPAL CONSULTANT:
INTEGRA VENTURES
HEALTHCARE | INFRASTRUCTURE | CONSULTANCY
solutions projects services
PRITHVI GREENS, BLOCK A GROUND FLOOR
PATHARQUARY GUWAHATI-781171, ASSAM
M: +91-8473872062

STAGE:-	DPR	
DRAWING NO:- 2024/ASSIST-GNM/DHE/E/AC/PROP/01		
START DATE	ISSUE DATE	SHEET SIZE
	07-04-2025	A3
PROJECT CODE:-	2024/ASSIST-GNM/DHE	
SCALE:-	N.T.S.	

DRAWING TITLE:-

ELECTRICAL LAYOUT OF AS BUILT GROUND FLOOR ACADEMIC BLOCK

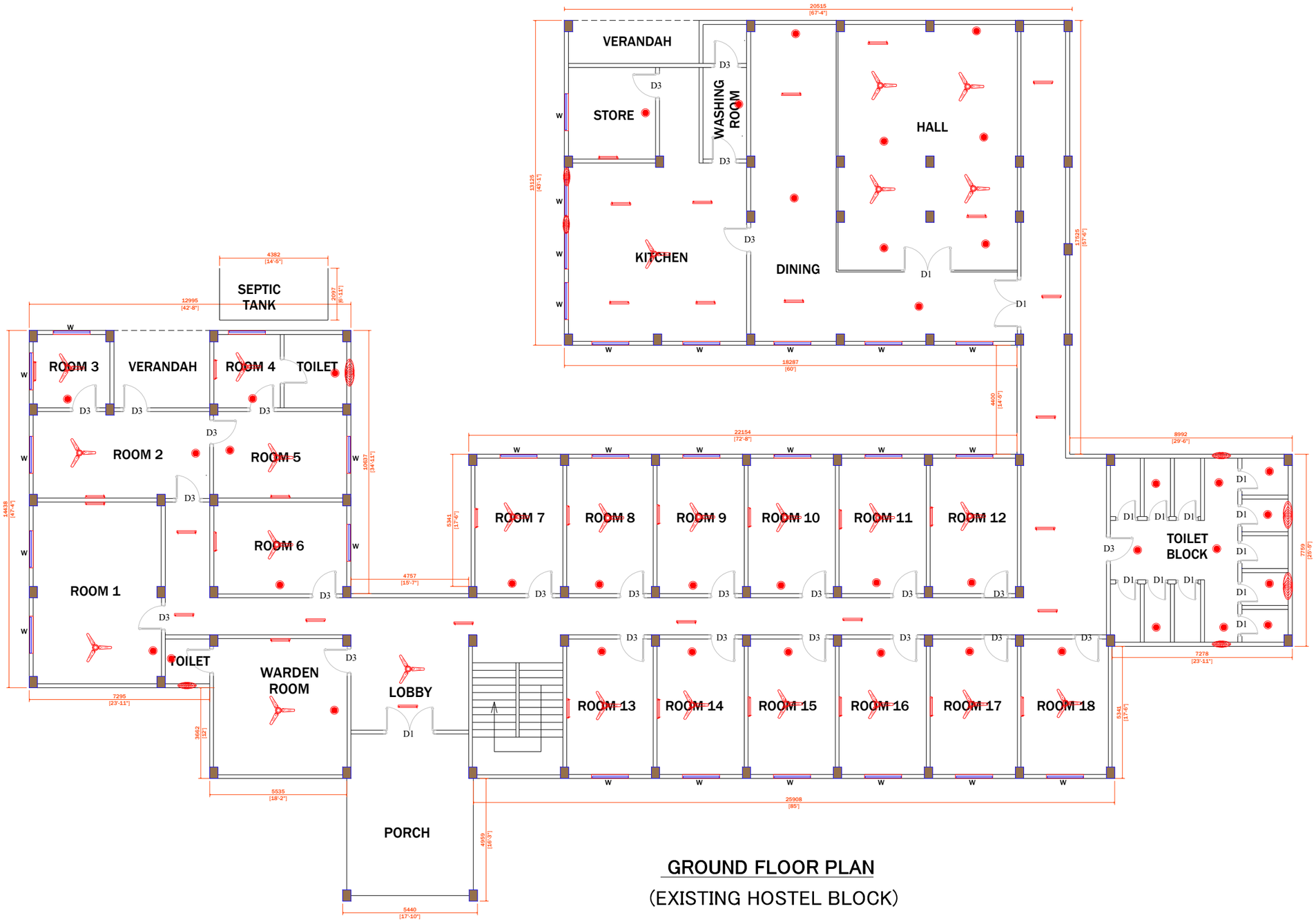

GROUND FLOOR PLAN

(EXISTING HOSTEL BLOCK)

PROPOSED LEGEND:	
	20W LED TUBELIGHT
	1200 MM CEILING FAN
	12W LED DOWNLIGHT
	300 MM EXHAUST FAN

PROJECT:-
ASSAM STATE SECONDARY HEALTHCARE INITIATIVE FOR SERVICE DELIVERY TRANSFORMATION (ASSIST)

CLIENT:-
ASSAM HEALTH INFRASTRUCTURE DEVELOPMENT & MANAGEMENT SOCIETY (AHIDMS)

PRINCIPAL CONSULTANT:
INTEGRA VENTURES
HEALTHCARE | INFRASTRUCTURE | CONSULTANCY
PRITHVI GREENS, BLOCK A GROUND FLOOR
PATHARQUARY GUWAHATI-781171, ASSAM
M: +91-8473872062

STAGE:-	DPR	
DRAWING NO:- 2024/ASSIST-GNM/DHE/E/HS/AS BUILT/01		
START DATE	ISSUE DATE	SHEET SIZE
	07-04-2025	A3
PROJECT CODE:-	2024/ASSIST-GNM/DHE	
SCALE:-	N.T.S.	

DRAWING TITLE:-
ELECTRICAL LAYOUT OF AS BUILT GROUND FLOOR HOSTEL BLOCK

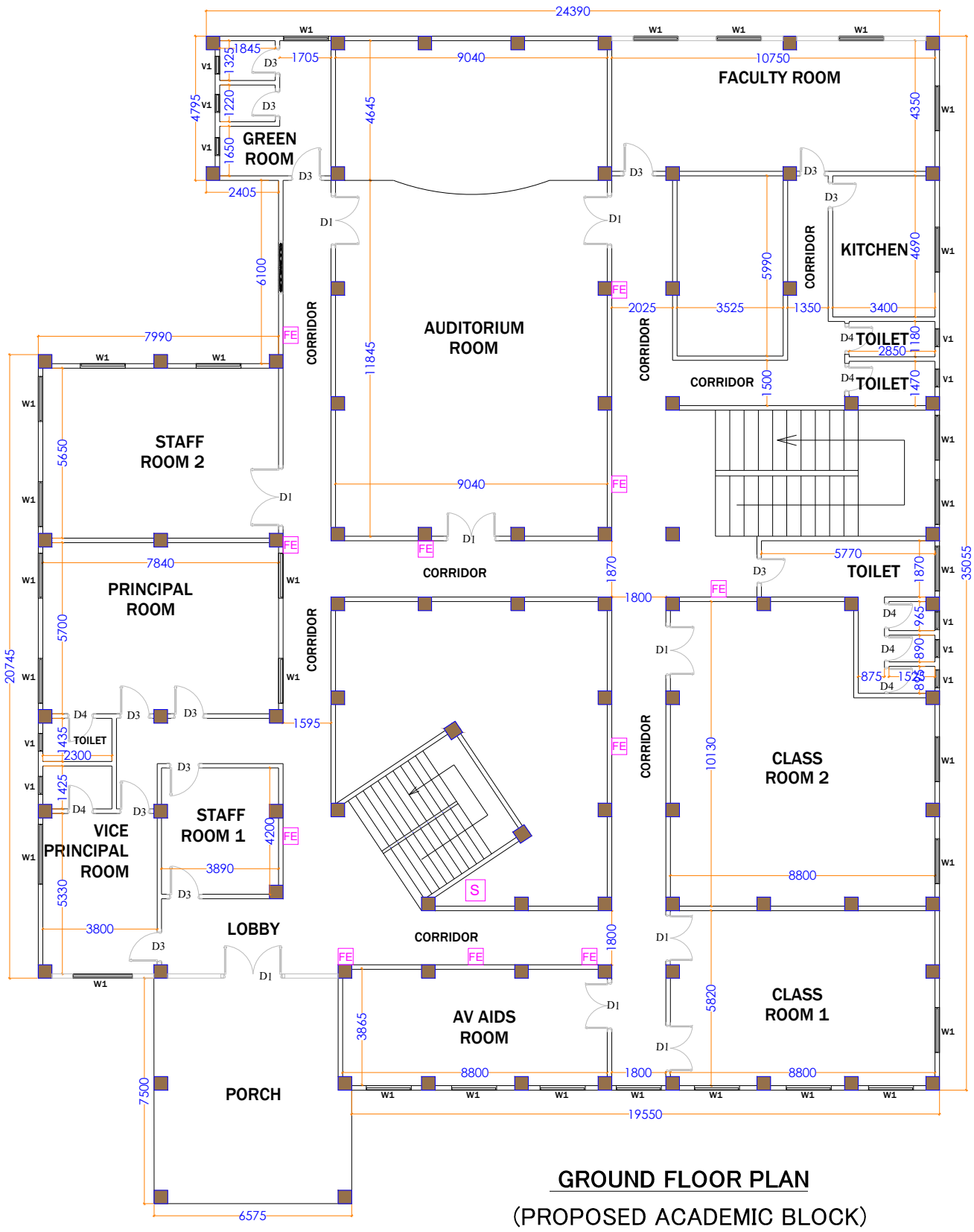

GROUND FLOOR PLAN

(PROPOSED ACADEMIC BLOCK)

LEGEND:	
FE	FIRE EXTINGUISHER
S	SAND BUCKET

PROJECT:-
ASSAM STATE SECONDARY HEALTHCARE INITIATIVE FOR SERVICE DELIVERY TRANSFORMATION (ASSIST)

CLIENT:-
ASSAM HEALTH INFRASTRUCTURE DEVELOPMENT & MANAGEMENT SOCIETY (AHIDMS)

PRINCIPAL CONSULTANT:

INTEGRA VENTURES
HEALTHCARE | INFRASTRUCTURE | CONSULTANCY
solutions projects services

PRITHVI GREENS, BLOCK A GROUND FLOOR
PATHARQUARY GUWAHATI-781171, ASSAM
M: +91-8473872062

STAGE:-	DPR	
DRAWING NO:- 2024/ASSIST-GNM/DHE/FF/ACA/PROP/01		
START DATE	ISSUE DATE	SHEET SIZE
	07-04-2025	A3
PROJECT CODE:-	2024/ASSIST-GNM/DHE	
SCALE:-	N.T.S.	

DRAWING TITLE:-

FIRE FIGHTING LAYOUT OF AS BUILT GROUND FLOOR ACADEMIC BLOCK

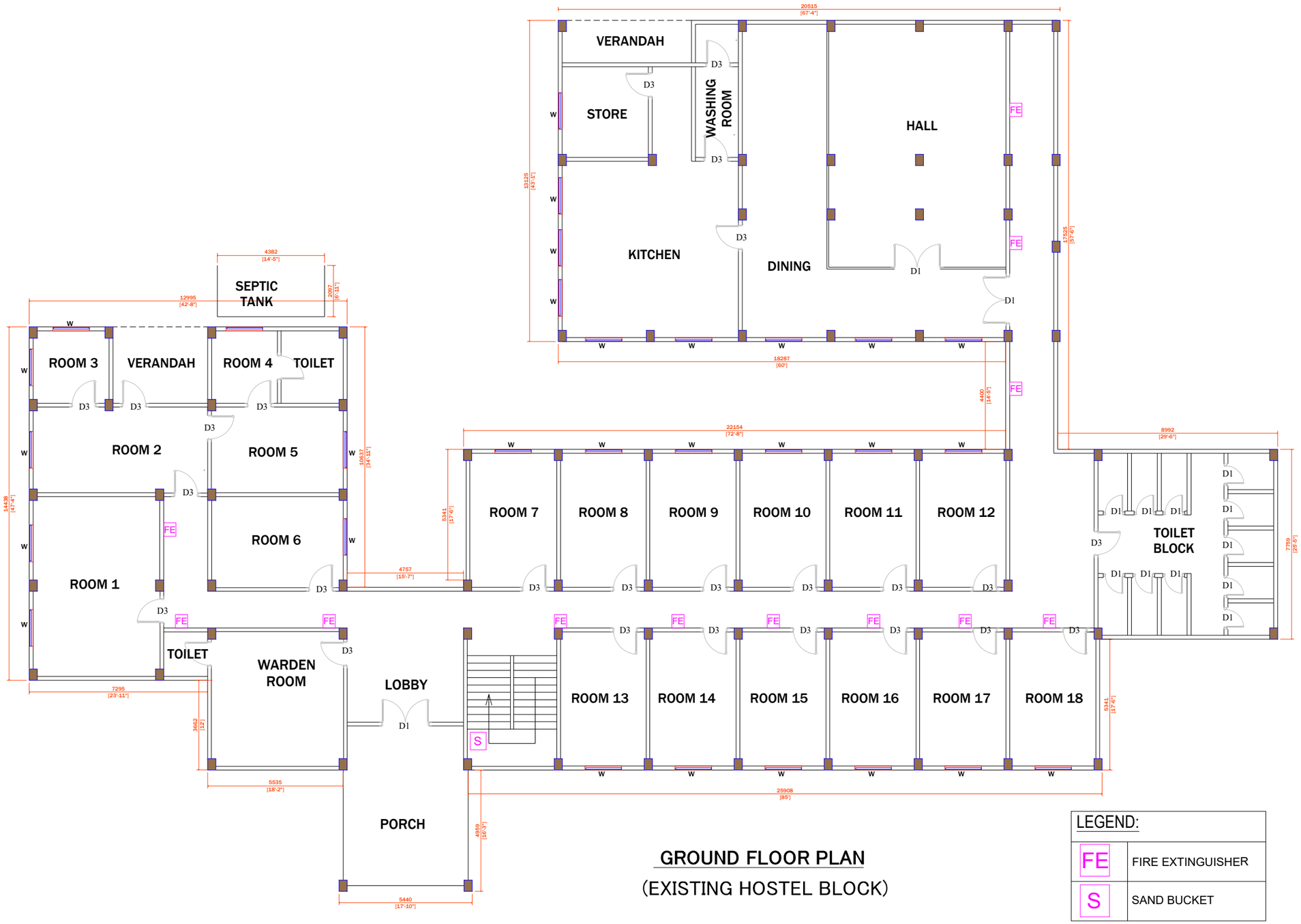

GROUND FLOOR PLAN

(EXISTING HOSTEL BLOCK)

LEGEND:	
FE	FIRE EXTINGUISHER
S	SAND BUCKET

PROJECT:-
ASSAM STATE SECONDARY HEALTHCARE INITIATIVE FOR SERVICE DELIVERY TRANSFORMATION (ASSIST)

CLIENT:-
ASSAM HEALTH INFRASTRUCTURE DEVELOPMENT & MANAGEMENT SOCIETY (AHIDMS)

PRINCIPAL CONSULTANT:

INTEGRA VENTURES
HEALTHCARE | INFRASTRUCTURE | CONSULTANCY

PRITHVI GREENS, BLOCK A GROUND FLOOR
PATHARQUARY GUWAHATI-781171, ASSAM
M: +91-8473872062

STAGE:-	DPR	
DRAWING NO:- 2024/ASSIST-GNM/DHE/FF/HS/AS BUILT/01		
START DATE	ISSUE DATE	SHEET SIZE
	07-04-2025	A3
PROJECT CODE:-	2024/ASSIST-GNM/DHE	
SCALE:-	N.T.S.	

DRAWING TITLE:-

FIRE FIGHTING LAYOUT OF AS BUILT GROUND FLOOR HOSTEL BLOCK

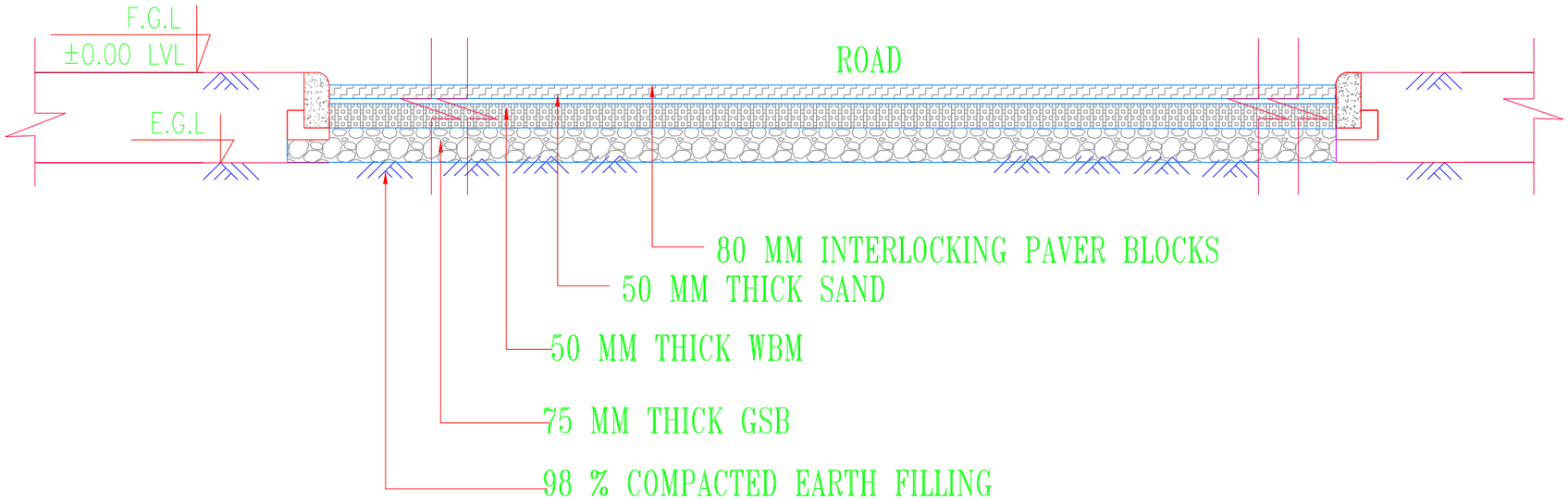

TYPICAL CROSS SECTION FOR PAVERS BLOCK ROAD

PROJECT:-
ASSAM STATE SECONDARY HEALTHCARE INITIATIVE FOR SERVICE DELIVERY TRANSFORMATION (ASSIST)

CLIENT:-
ASSAM HEALTH INFRASTRUCTURE DEVELOPMENT & MANAGEMENT SOCIETY (AHIDMS)

PRINCIPAL CONSULTANT:

INTEGRA VENTURES
HEALTHCARE | INFRASTRUCTURE | CONSULTANCY
solutions projects services

PRITHVI GREENS, BLOCK A GROUND FLOOR
PATHARQUARY GUWAHATI-781171, ASSAM
M: +91-8473872062

STAGE:-	DPR	
DRAWING NO:- 2024/ASSIST-GNM/DHE/ROAD /01		
START DATE	ISSUE DATE	SHEET SIZE
	07-04-2025	A3
PROJECT CODE:-	2024/ASSIST-GNM/DHE	
SCALE:-	N.T.S.	

DRAWING TITLE:-

ROAD DETAIL, GNM, DHEMAJI ASSAM

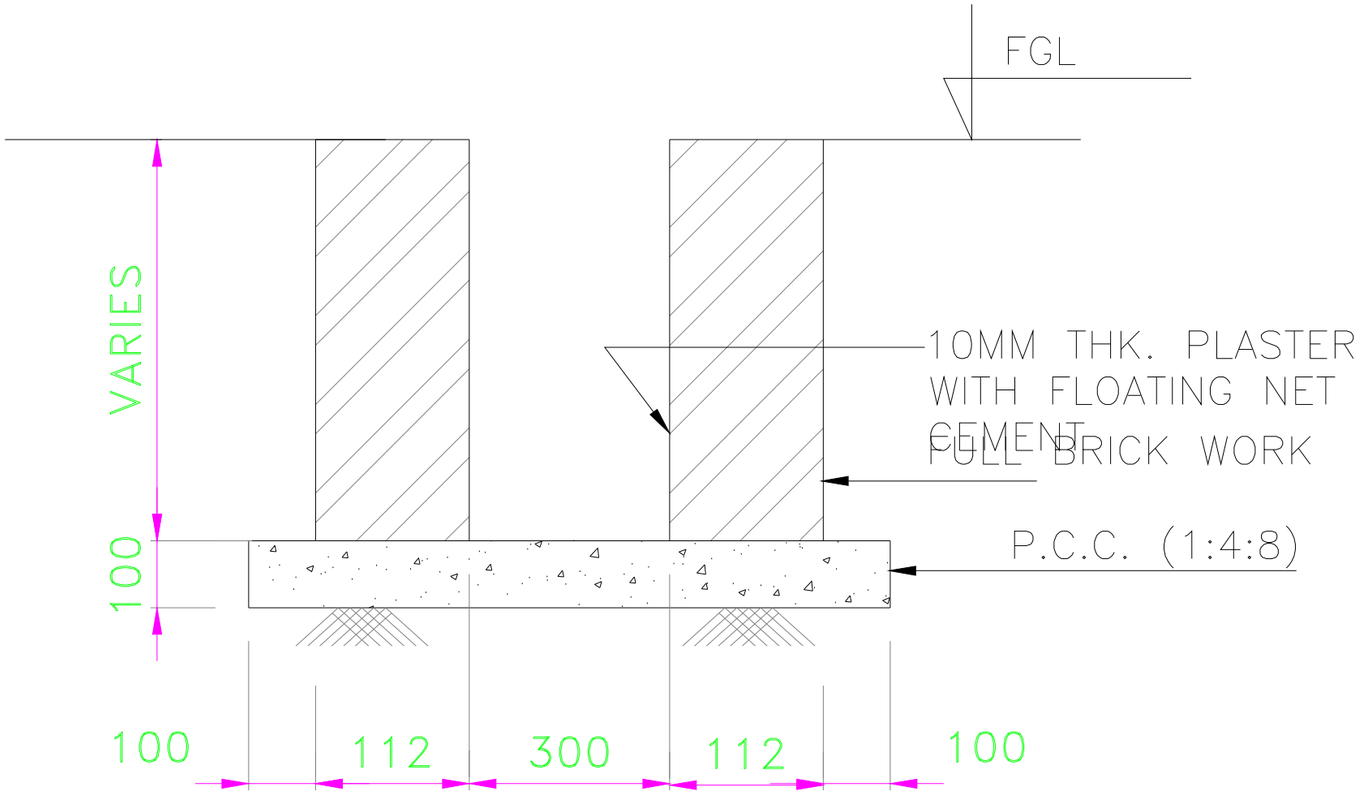

FULL BRICK DRAIN DETAIL

(FOR 300MM WIDE DRAIN)

PROJECT:-
ASSAM STATE SECONDARY HEALTHCARE INITIATIVE FOR SERVICE DELIVERY TRANSFORMATION (ASSIST)

CLIENT:-
ASSAM HEALTH INFRASTRUCTURE DEVELOPMENT & MANAGEMENT SOCIETY (AHIDMS)

PRINCIPAL CONSULTANT:

INTEGRA VENTURES
HEALTHCARE | INFRASTRUCTURE | CONSULTANCY
solutions projects services

PRITHVI GREENS, BLOCK A GROUND FLOOR
PATHARQUARY GUWAHATI-781171, ASSAM
M: +91-8473872062

STAGE:-	DPR	
DRAWING NO:- 2024/ASSIST-GNM/DHE/DRAIN/01		
START DATE	ISSUE DATE	SHEET SIZE
	07-04-2025	A3
PROJECT CODE:-	2024/ASSIST-GNM/DHE	
SCALE:-	N.T.S.	

DRAWING TITLE:-

DRAIN DETAIL, GNM, DHEMAJI, ASSAM

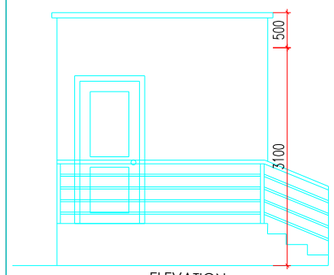

ELEVATION

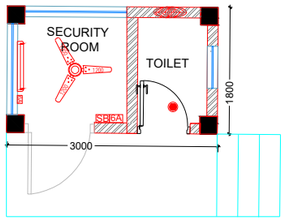

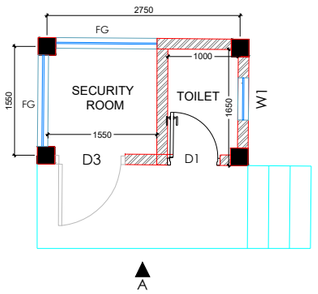

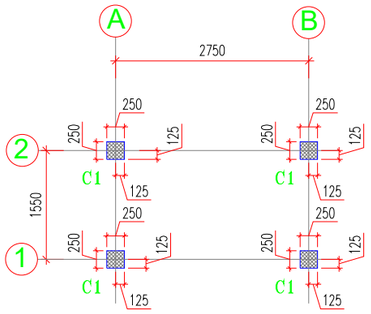

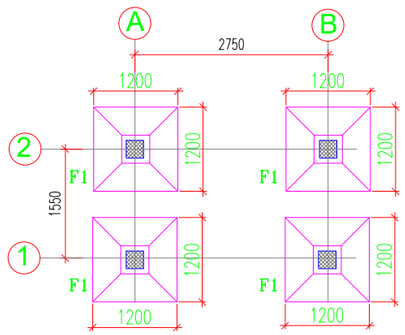

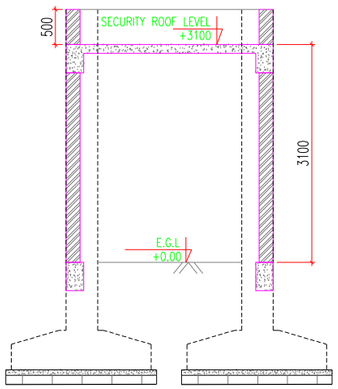

SECTION 1-1

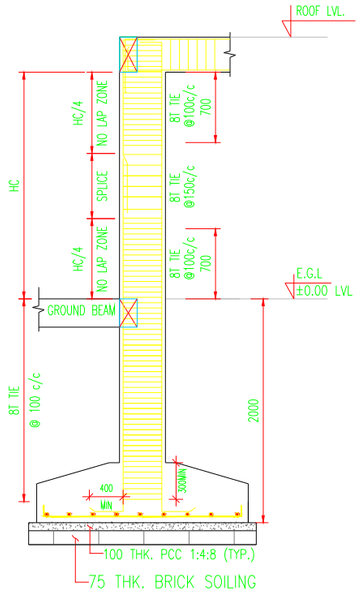

TYPICAL LONG SECTION OF COLUMN WITH TIES
HC=COLUMN HEIGHT

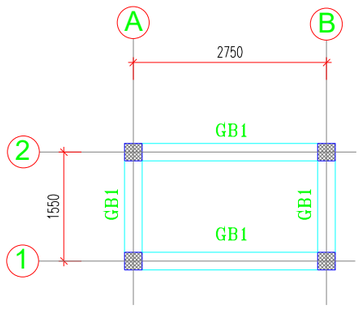

GROUND LVL. PLAN AT+0.00
ALL BEAM SIZE (250X450) U.O.S

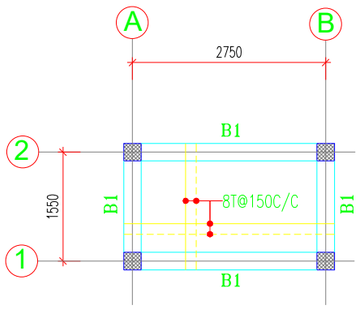

SECURITY ROOM PLAN AT+3100MM
ALL BEAM SIZE (250X450) U.O.S

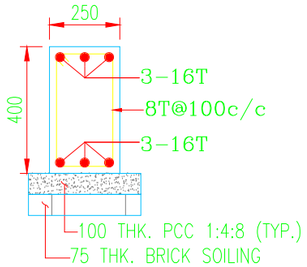

GROUND BEAM (GB1)

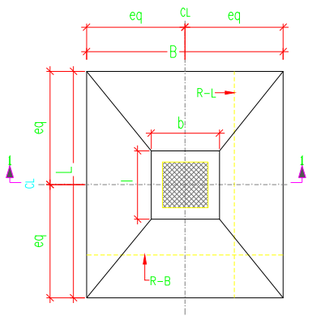

TYPICAL PLAN OF ISOLATED FOOTING

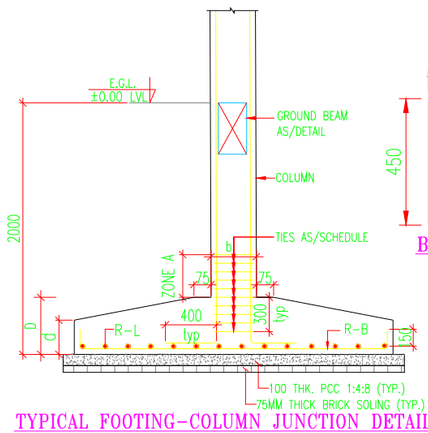

TYPICAL FOOTING-COLUMN JUNCTION DETAIL
SECTION 1-1

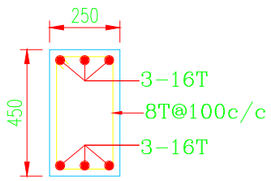

BEAM (B1)

FOUNDATION TO ROOF FLOOR LVL.	SECTION	b, 250, 250, 250
	TIES/SET	a+2b (G1)
	REINF.	4-16T
	COLUMN SIZE	250x250
	MIX.	M-25
LEVELS MARKED		C-1

SCHEDULE OF ISOLATED FOOTINGS

FOOTING NO.	FOOTING SIZE				DEPTH OF FOOTING		REINFORCEMENT	
	L	B	l	b	D	d	R-L	R-B
F1	1200	1200	400	400	450	250	12T@125c/c	12T@125c/c

NOTES:

1. ALL DIMENSIONS ARE IN MILLIMETERS.
2. THIS DRAWING SHALL BE READ WITH ALL RELEVANT ARCH. DRAWING.
3. DO NOT SCALE , FOLLOW WRITTEN DIMENSIONS ONLY.
4. ALL R.C.C. WORK SHALL BE DONE AS (IS:456) WITH LATEST AMMENDMENTS.
5. STRUCTURAL DESIGN IS CARRIED OUT FOR SEISMIC ZONE V AS PER IS:1893-2016 & IS:456-2000
6. GRADE OF CONCRETE WILL BE M25
7. CLEAR COVER TO REINFORCEMENT SHALL BE AS PER IS: 456-2000 WHICH ARE AS FOLLOWS :-
   - A) FOOTINGS : 50 MM
   - B) BEAMS : 30 MM
   - C) SLAB : 20 MM
   - D) COLUMN : 40 MM
8. ANY DISCREPANCY IN DIMENSIONS SHALL BE BROUGHT TO THE NOTICE OF ARCHITECT & ENGINEER BEFORE START OFWORK.
9. HIGH YIELD STRENGTH DEFORMED BARS WITH CHARACTERISTIC STRENGTH OF 500N/Sqmm. CONFORMING TO (IS:1786-1985) SHALL BE USED(TMT STEEL).
10. NOT MORE THAN 50% OF BARS SHALL BE SPLICED AT ONE SECTION.
11. LAP LENGTH FOR HIGH YIELD STRENGTH DEFORMED BARS SHALL AS PER IS:456.
    BARS IN COMPRESSION 40 x d
    BARS IN TENSION 50 x d
    WHERE d IS BAR DIAMETER.
12. EGL INDICATES EXISTING GROUND LEVEL.
13. FGL INDICATES FINISHED GROUND LEVEL.
14. IN ALL THE BEAMS, WHERE THERE ARE TWO ROWS OF BARS, EITHER IN TOP OR IN BOTTOM BARS, THE BARS IN EACH SPACING OF 25MM BY PROVISION OF 25MM SPACER BAR.
15. WELL COMPACTED EARTH UP TO 98% STANDARD PROCTOR DENSITY REQUIRED BELOW THE FOUNDATION & FLOOR LVL.
16. THE ASSUMED BEARING CAPACITY OF SOIL IS TAKEN TO TO 12 MT/SM AT A DEPTH OF 2.5 METRES BELOW E.G.L. AS PER GEO-TECHNICAL INVESTIGATION REPORT. SOIL CAPACITY NEEDS TO BE CONFIRMED BY CONDUCTING A PLATE-LOAD TEST.

PROPOSED LEGEND:

6A	6A POWER POINT
SB	SWITCH BOARD
	20W LED TUBELIGHT
	1200 MM CEILING FAN
	12W DOWNLIGHT
	300 MM EXHAUST FAN

PROJECT:-
ASSAM STATE SECONDARY HEALTHCARE INITIATIVE FOR SERVICE DELIVERY TRANSFORMATION (ASSIST)

CLIENT:-
ASSAM HEALTH INFRASTRUCTURE DEVELOPMENT & MANAGEMENT SOCIETY (AHIDMS)

PRINCIPAL CONSULTANT:
INTEGRA VENTURES
HEALTHCARE SOLUTIONS | INFRASTRUCTURE PROJECTS | CONSULTANCY SERVICES
PRITHVI GREENS, BLOCK A GROUND FLOOR
PATHARQUARY GUWAHATI-781171, ASSAM
M: +8473872062

STAGE:-	DPR
DRAWING NO:- 2024/ASSIST-GNM/DHE/SECURITY /01	

START DATE	ISSUE DATE	SHEET SIZE
	07-04-2025	A3

PROJECT CODE:-	2024/ASSIST-ANM/DHE
SCALE:-	N.T.S.

DRAWING TITLE:-

PROPOSED SECURITY BOOTH DETAIL, GNM, DHEMAJI, ASSAM

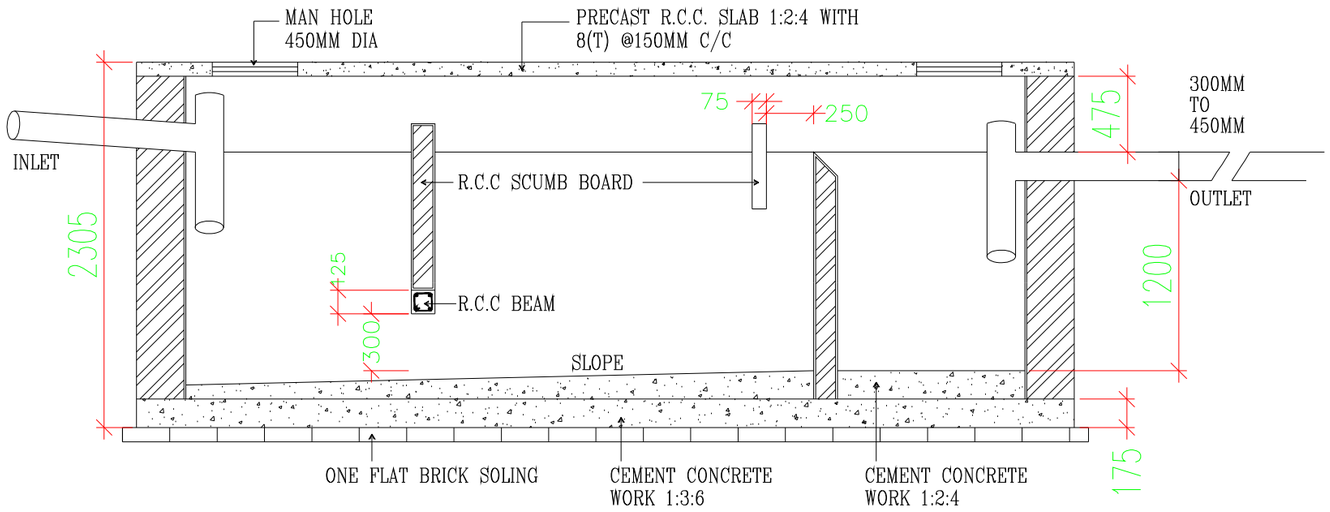

SECTION A–A

SCALE 1:25

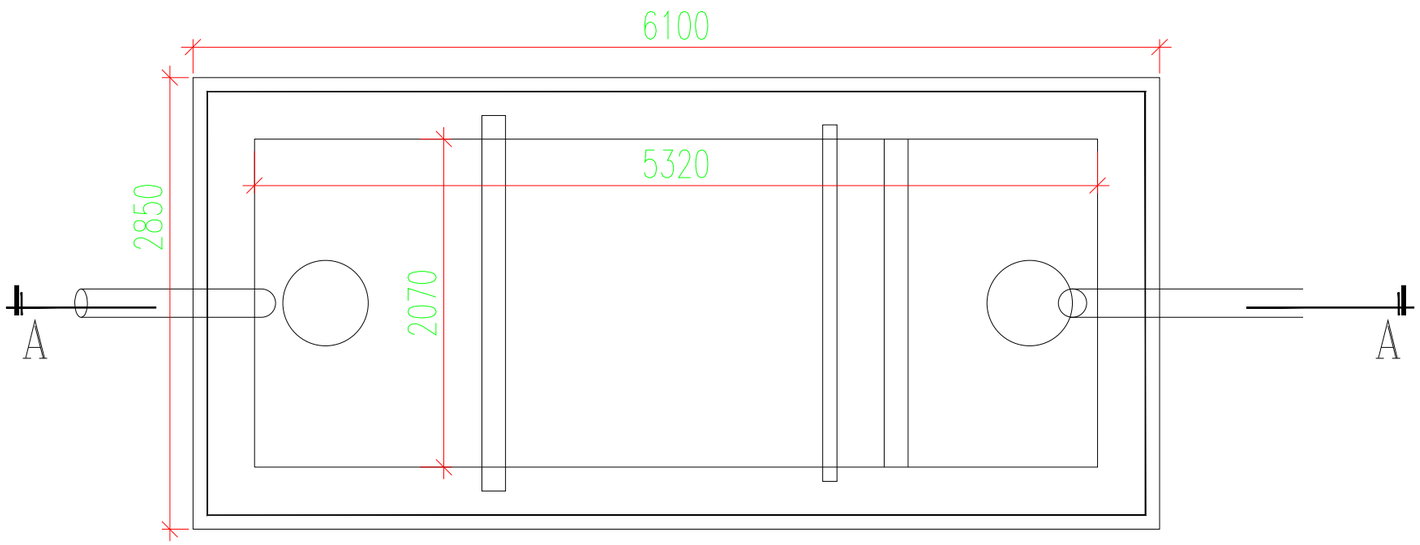

PLAN OF SEPTIC TANK

SCALE 1:25

PROJECT:-
ASSAM STATE SECONDARY HEALTHCARE INITIATIVE FOR SERVICE DELIVERY TRANSFORMATION (ASSIST)

CLIENT:-
ASSAM HEALTH INFRASTRUCTURE DEVELOPMENT & MANAGEMENT SOCIETY (AHIDMS)

PRINCIPAL CONSULTANT:

INTEGRA VENTURES
HEALTHCARE | INFRASTRUCTURE | CONSULTANCY
solutions projects services

PRITHVI GREENS, BLOCK A GROUND FLOOR
PATHARQUARY GUWAHATI-781171, ASSAM
M: +91-8473872062

STAGE:-	DPR
DRAWING NO:- 2024/ASSIST-GNM/DHE/SEPTIC TANK/01	

START DATE	ISSUE DATE	SHEET SIZE
	07-04-2025	A3

PROJECT CODE:-	2024/ASSIST-GNM/DHE
SCALE:-	N.T.S.

DRAWING TITLE:-

SEPTIC TANK DETAIL, GNM, DHEMAJI, ASSAM